XR1 SOM (System On Module)

HW Technical Specification

Version: D01

CONTENTS

1. General Description 3
2. Features & Technical Specification 3
   2.1 Features 3
   2.2 Technical Specification 4
3. Function Block Diagram 5
4. BGA Ball Pin Assignment 6
5. Recommended Operating Conditions 6
6. Electrical Characteristics 7
   6.1 BGA Pin Out Major Interface Functions 7
   6.2 Power Signal 8
   6.3 BGA Signal Assignments 9
   6.4 ESD Ratings 14
7. Reserved Pin For Test Point 14
8. Mechanical Outline Drawing 16
   8.1 The SOM Outline Dimension 16
   8.2 Placement Drawing 17
9. Carrier Board Design for BGA Pad Recommendation 18
10. SOM/Carrier Board Soldering 19
11. Revision Version 19

1. General Description

Jorjin's XR1 SOM is a micro Application Processor module based on Qualcomm Snapdragon XR1 platform, including SXR1130 CPU and PM670 & PM670L Power Management + Battery Charging ICs. SOM Memory uses an MCP including NAND and LPDDR4. XR1 SOM provides cost and time-to-market advantage for the design of Wearable AR Devices. XR1 SOM can be easily complemented with Jorjin's existing Wifi/Bluetooth/GPS wireless connectivity solutions.

2. Features & Technical Specification

2.1 Features

vIn addition to the CPU and its Power Management chips PM670 & PM670L, XR1 SOM integrates 4GB LPDDR4 SDRAM and 64GB eMMC NAND. XR1 SOM measures 38mm x 17mm and its total height is 4.03 mm including metal shielding case, thus providing significant board-area savings. XR1 SOM is available as a BGA with 364 balls dedicated to power rails and to interfaces with connectivity and multimedia peripherals.

2.2 Technical Specification

Key Feature	Description
Processors	
Application Processor	Qualcomm® Snapdragon™ SXR1130 Kryo Gold: Two high-performance core up to 2.5 GHz; Kyro Silver: Six low-power cores up to 1.7 GHz
Graphics Processing Unit	Adreno 615
Video Encode/Decode	Encode:4K60 HEVC/H.264 + 1080P30, 8-bitColor depth for HDR ; Decode:4K60 10-bit: HEVC/VP9/H.264, HDR 10
DSP	Qualcomm ®Hexagon™ DSP with dual Hexagon Vector eXtensions designed (dual-HVX512) for 1.2Ghz
RAM/Storage	eMCP (4GB LPDDR/64GB eMMC),
PMIC	PM670+PM670L
Audio CODEC	SLIMbus (Designed in HDK-WCD9341)
OS Support	Android 8.1/OS and apps OTA upgradeable
Interface	
Display/OE	DSI MIPI*2 (4-lane, up to 2560 x1600 10 bit 60 fps)
Camera	CSI MIPI *3 (4-lane)
USB	USB 3.1*1
SD	SD 3.0*1
LPI Port (UART/I2C/I2S/SPI/)	Multiplexed serial interface functions 10 (UART *3/SLIMbus *2/SPI *4/I2C* 1)
QUP	Qualcomm Universal Peripheral (QUP) ports 8 (UART*1/I2C*3/I2S*1/SPI*3)
GPIO	16

JTAG	1
Input Power	DC +4.2V /3A
Environment	
Operation /Storage	-20℃ ~ 65℃ / -30℃ ~ 85℃
Form Factor/Size	SIP Module/17*38 mm

3 Function Block Diagram

- XR1130: 64-bit applications processor*Kryo300, Adreno 3D graphics accelerator and Hexagon DSP audio subsystem
- PM670/PM670L: Input/Output Power Management
- EMCP: System Dual-channel non-PoP high-speed memory – LPDDR4X SDRAM/4GBytes designed for a 1866 MHz clock (2 × 16-bit); eMMC5.1/64G Bytes memory

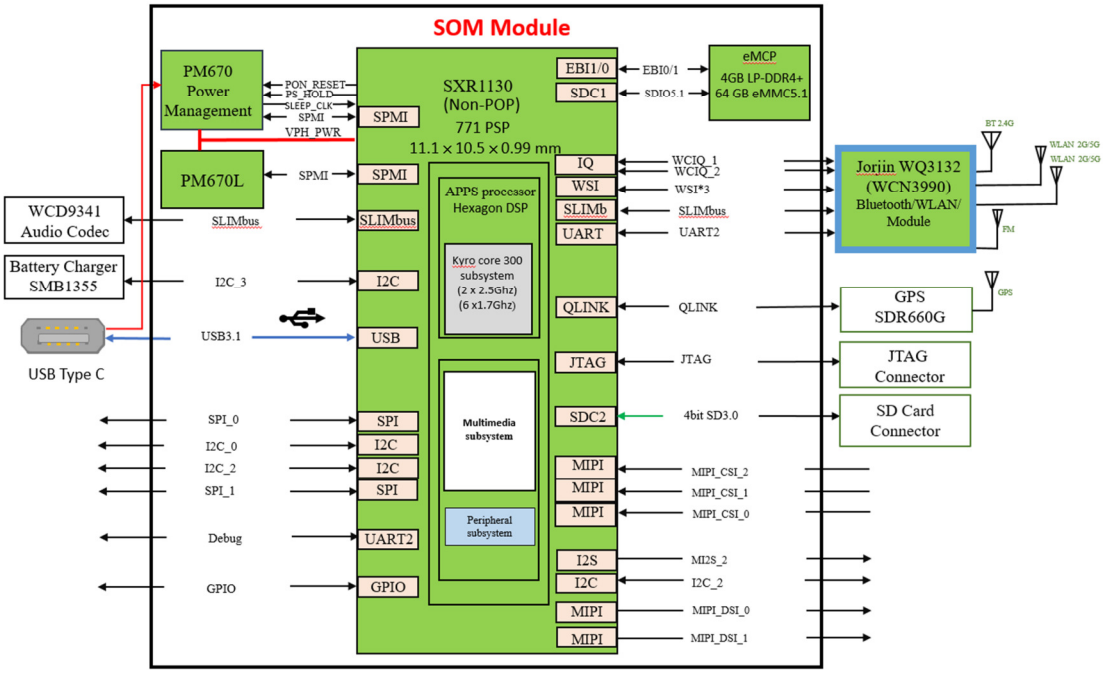

4 BGA Ball Pin Assignment

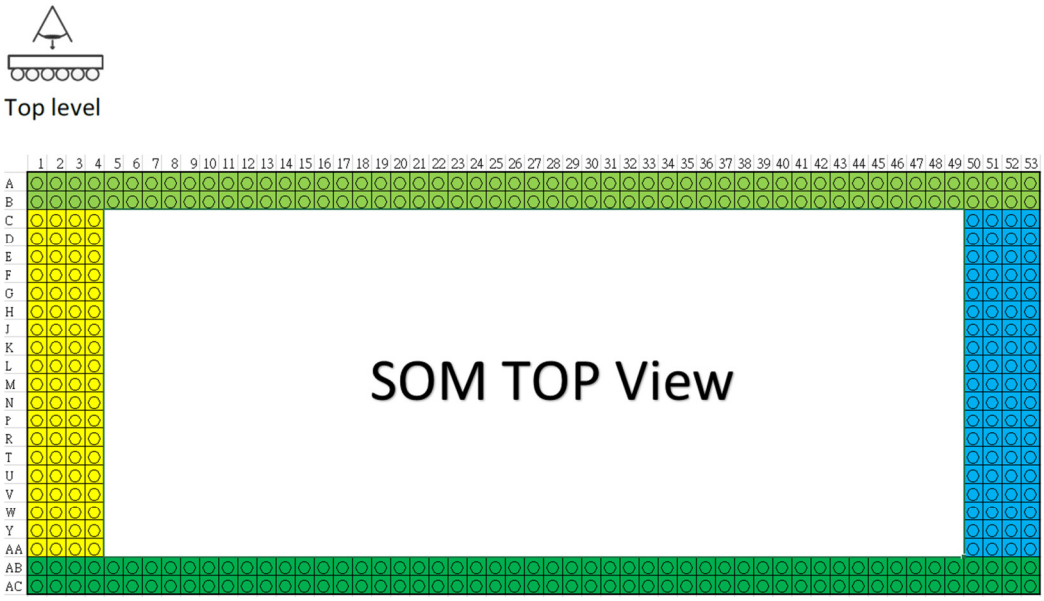

Figure 4-1. XR1 SOM pin number map (Top view)

5 Recommended Operating Conditions

The XR1 SOM can be alternatively powered from the USB port input, from the DC input or from the Li-Battery input. The Li-Battery can be fast-charged through the USB Type C connected to a 3A Qualcomm Quick Charger adapter. It can also be charged through the DC-in connector.

Table 5 below indicates the XR1 SOM main power operating conditions:

Table 5 Power Operating Ratings

Operating Ratings				
Parameter	Min	Nom	Max	Units
USB_IN	3.6	5	10	V
	100	2000	3000	mA
DC_IN	3.7	5	10	V
	100	1500	2000	mA
VBAT_IN	3.6	3.7	4.2	V
VPH_PWR Output	2.8	3.8	4.75	V
Flash_LED Output	3.0	-	4.5	V
Flash_LED Output Current	100	-	1500	mA
Operating Temperature	-20	25	65	℃

6 Electrical Characteristics

The XR1 SOM Power, GND and Data signals can be accessed from its 364 balls. The ball pitch is 0.7mm and the size of the pad dedicated to each ball is 0.4mm. The signals out of the XR1 SOM are organized to best accommodate AR functionality and applications. The XR1 SOM carrier board (XR1 SDK) lay-out provides a useful guidance for the implementation of the XR1 SOM into customer's target board.

6.1 BGA Pin Out Major Interface Functions

1) VBUS Power input
   -USB VBUS_IN power to PM670 charge
   -Connect with SMB1355 Parallel charger when paired
2) DC Power input
   -DC_IN DC charging power to PM670 charge
3) Battery Power input
   -Connect to Battery package
4) SOM main ground connectivity pins
5) SXR1130 device supports up to three 4-lane camera interfaces.
6) GNSS GPS
   -QLink digital interface connect to SDR660G
   -Three downlink lanes and one uplink lane
7) The Booting control signal
8) The SXR1130 supports the WCD9341 audio codec IC to provide the system's audio functions. SXR1130 audio-related interface options with the WCD include:
   - SLIMbus
   - MI2S
   -CDC PDM port
   -Sound Wire interface to WSA8810/WSA8815
9) SXR1130 device supports two 4-lane MIPI_DSI interfaces
   -MIPI Alliance Specification for D-PHY V1.2
   -MIPI Alliance Specification for Display Serial Interface
10) USB Interfaces
    -Universal Serial Bus Specification, Revision 3.1 which can support Type-C with VESA DisplayPort V1.4
11) SD3.0 interface(SDC2 4bit)
    -Secure digital interfaces Specification, Revision 3.0

12) Through proper configuration of the twelve BLSP ports:
   -Universal asynchronous receiver/transmitter (UART) ports
   -Inter-integrated circuit (I2C) interfaces
   -Serial peripheral interface (SPI) ports
13) Snapdragon Sensor Core Port
   -LPI with Hexagon DSP consists of Snapdragon sensor core and low-power audio subsystem
14) Wireless Connectivity
   -UART port connect to WCN3990 Bluetooth function
   -IQ port connect to WCN3990 WIFI function
15) Debug Port
   -JTAG and UART2(TX/RX)
16) Power Management IC Power Out
   -PM670 low-dropout (LDO) linear regulators out
   -PM670L low-dropout (LDO) linear regulators out

6.2 Power Signal

Pin Number	Signal Name	Functional Description
A4,A9,B18,A23,B23, B24,A25,B25,A27,B27, A29,B29, B48,A52,A53,C3,C4, H1,H2, L3,M1,M2,T1,AB4,AC1,AC2,AC8,AB19,AB27,AC27,AB34,AB36,AB39,AC39,AB40,AB43,AC43,AB51,AC52,AC53,G51,K51,M52,M53,U51,AA50	GND	Ground reference for the SOM
B9,A10,B10,A11,B11	VBAT	Battery voltage node, Single cell Lithium battery connection or 3.8V DC power input
L51,M51,N50,N51,P50,P51,R50,R51,T50, T51	VPH_PWR	Main power source for SOM.
V4	VCOIN	Optional +3V rechargeable coin cell

		backup battery connection to SOM.
U50,V50,V51	VREG_BOB	Regulated BOB output
B37	VREG_CAM_DOVDD0_1P8	Camera power DOVDD
A40	VREG_L7B_3P125	For USB
A50,A51	VREG_L13A_1P8	P3 pad, general IO 1.8V
M3,M4	VREG_L19A_3P3	L19 LDO regulated output
N4	VREG_L16A_2P7	L16 LDO regulated output QFE
R1,R2	VREG_S6A_1P35	MV sub regulation LDOs
R3	VREG_L2A_1P0	SDR 1.0 V analog
R4	VREG_L3A_1P0	SDR 1.0 V analog
T4	VREG_L12A_1P8	SDR 1.8 V BBRX_HV, DAC
Y3,Y4	VREG_S4A_2P04	HV subregulation LDOs
AA3	VREG_L9A_1P8	WCN_XO
AA4	VREG_L7A_1P2	SDR 1.2
AC6	VREG_L11A_1P8	Display touchscreen
AB8	VREG_L6A_1P3	WCN RF, GPS, Metis
AB10,AC10	VREG_L14A_1P8	Sensors (1.8 V)
G50	VREG_L3B_3P0	L3 LDO regulated output
H51	VREG_L13A_1P8_FET	P3 pad, general IO (1.8 V)
J50	VREG_L8B_3P3	PM670L L8 LDO regulated output
K50	VREG_L5B_2P95	PM670L L5 LDO regulated output
M50	VREG_L4B_2P95	PM670L L4B LDO regulated output
W50	VREG_L6B_3P3	PM670L L6B LDO regulated output

6.3 BGA Signal Assignments

PIN OUT	AP Module	PIN OUT	AP Module
A1	WLAN_CH0_CMD_CLK	C50	MIPI_CSI1_L0_DATA_M
B1	WLAN_CH1_CMD_CLK	C51	MIPI_CSI1_L0_DATA_P
A2	WLAN_CH0_CMD_DATA	C52	MIPI_CSI2_L2_DATA_M
B2	WLAN_CH1_CMD_DATA	C53	MIPI_CSI2_L2_DATA_P
A3	DGND	D50	MIPI_CSI1_L1_DATA_P
B3	WLAN_5G_CLK_OUT	D51	MIPI_CSI1_L1_DATA_M
A4	DGND	D52	MIPI_CSI2_L1_DATA_P
B4	BOOT_PWR	D53	MIPI_CSI2_L1_DATA_M
A5	SMB_GND	E50	MIPI_CSI1_L2_DATA_P
B5	SMB_VCHG	E51	MIPI_CSI1_L2_DATA_M
A6	VBATT_CONN_VSNS_P	E52	MIPI_CSI2_L0_DATA_M
B6	WCN_CLK	E53	MIPI_CSI2_L0_DATA_P
A7	USB_CC2	F50	MIPI_CSI1_L3_DATA_M
B7	VBATT_CONN_VSNS_M	F51	MIPI_CSI1_L3_DATA_P
A8	VCONN_IN	F52	MIPI_CSI2_CLK_M
B8	USB_CC1	F53	MIPI_CSI2_CLK_P
A9	DGND	G50	VREG_L3B_3P0
B9	VBATT	G51	DGND
A10	VBATT	G52	MIPI_CSI0_CLK_P
B10	VBATT	G53	MIPI_CSI0_CLK_M
A11	VBATT	H50	VBUS_OVP_EN_N
B11	VBATT	H51	VREG_L13A_1P8_FET
A12	HAP_OUT_M	H52	MIPI_CSI0_L0_DATA_M
B12	HAP_OUT_P	H53	MIPI_CSI0_L0_DATA_P
A13	RFFE1_CLK	J50	VREG_L8B_3P3
B13	RFFE1_DATA	J51	CAM_DVDD0_1P2_EN
A14	GRFC_3	J52	MIPI_CSI0_L1_DATA_M
B14	GPIO_143_DISP_GPIO5	J53	MIPI_CSI0_L1_DATA_P
A15	SDC2_CLK	K50	VREG_L5B_2P95
B15	SDC2_CMD	K51	DGND
A16	SDC2_DATA_1	K52	MIPI_CSI0_L2_DATA_M
B16	SDC2_DATA_0	K53	MIPI_CSI0_L2_DATA_P
A17	SDC2_DATA_3	L50	KEY_VOLP_N
B17	SDC2_DATA_2	L51	VPH_PWR
A18	VCONN_EN	L52	MIPI_CSI0_L3_DATA_M
B18	DGND	L53	MIPI_CSI0_L3_DATA_P
A19	USB3_HS_DET_DM	M50	VREG_L4B_2P95
B19	USB3_HS_DET_DP	M51	VPH_PWR
A20	ACCL_GYRO_INT2	M52	DGND
B20	GPIO_140_DISP_GPIO2	M53	DGND
A21	ACCL_GYRO_INT1	N50	VPH_PWR
B21	QUP0_SPI_CS_1	N51	VPH_PWR
A22	GPIO_141_DISP_GPIO3	N52	MIPI_DSI0_L3_P
B22	LASER_RNG_EN	N53	MIPI_DSI0_L3_M
A23	DGND	P50	VPH_PWR
B23	DGND	P51	VPH_PWR
A24	QLINK_REQUEST	P52	MIPI_DSI0_L2_M
B24	DGND	P53	MIPI_DSI0_L2_P
A25	DGND	R50	VPH_PWR
B25	DGND	R51	VPH_PWR
A26	GPIO_147_DISP_ADC2	R52	MIPI_DSI0_CLK_P
B26	GPIO_146_DISP_ADC1	R53	MIPI_DSI0_CLK_M
A27	DGND	T50	VPH_PWR
B27	DGND	T51	VPH_PWR
A28	WCD_REG_VSEL	T52	MIPI_DSI0_L1_P
B28	SD_CARD_DET_N	T53	MIPI_DSI0_L1_M
A29	DGND	U50	VREG_BOB

B29	DGND	U51	DGND
A30	CAM_MCLK3	U52	MIPI_DSI0_L0_M
B30	CAM_MCLK1	U53	MIPI_DSI0_L0_P
A31	CAM_MCLK2	V50	VREG_BOB
B31	CAM_MCLK0	V51	VREG_BOB
A32	LASER_RNG_IRQ	V52	MIPI_DSI1_L3_M
B32	OIS_SYNC	V53	MIPI_DSI1_L3_P
A33	CCI_I2C_SCL0	W50	VREG_L6B_3P3
B33	CCI_I2C_SDA0	W51	RED_LED
A34	CCI_I2C_SDA1	W52	MIPI_DSI1_CLK_M
B34	CCI_I2C_SCL1	W53	MIPI_DSI1_CLK_P
A35	CAM_DOVDD0_1P8_EN	Y50	GREEN_LED
B35	CAM_VCM0_2P8_EN	Y51	BLUE_LED
A36	CAM1_RST_N	Y52	MIPI_DSI1_L2_M
B36	CAM0_RST_N	Y53	MIPI_DSI1_L2_P
A37	CAM_IRQ	AA50	DGND
B37	VREG_CAM_DOVDD0_1P8	AA51	WLAN_SW_CTRL
A38	CAM3_RST_N/IR_LED_EN	AA52	MIPI_DSI1_L1_M
B38	FRONT_FL_EN	AA53	MIPI_DSI1_L1_P
A39	CAM2_RST_N		
B39	CAM_AVDD1_2P85_EN		
A40	VREG_L7B_3P125		
B40	FL_STROBE_TRIG		
A41	QUP0_SPI_CS_0		
B41	QUP0_SPI_MOSI		
A42	QUP0_SPI_MISO		
B42	QUP0_SPI_CLK		
A43	QUP3_I2C_SDA		
B43	QUP3_I2C_SCL		
A44	WCSS_PWR_REQ		
B44	CAM_AVDD0_2P85_EN		
A45	QUP6_HCI_UART_RFR_N		
B45	QUP6_HCI_UART_CTS_N		
A46	QUP6_HCI_UART_RX		
B46	QUP6_HCI_UART_TX		
A47	MSS_LTE_COEX_RX		
B47	MSS_LTE_COEX_TX		
A48	NFC_ESE_PWR_REQ		
B48	DGND		
A49	GPIO_43		
B49	GPIO_44		
A50	VREG_L13A_1P8		
B50	MIPI_CS1_CLK_M		
A51	VREG_L13A_1P8		
B51	MIPI_CSI1_CLK_P		
A52	DGND		
B52	MIPI_CSI2_L3_M		
A53	DGND		
B53	MIPI_CSI2_L3_P		

PIN OUT	AP Module	PIN OUT	AP Module
AB5	HDMI_5VM_EN	C1	WLAN_BT_COEX_DATA
AC5	BATT_THERM	C2	WLAN_BT_COEX_CLK
AB6	GRFC_4	C3	DGND
AC6	VREG_L11A_1P8	C4	DGND
AB7	QUP10_I2C_SCL	D1	WLAN_CH0_I_M
AC7	QUP10_I2C_SDA	D2	WLAN_CH0_I_P
AB8	VREG_L6A_1P3	D3	QLINK_RX3_P
AC8	DGND	D4	QLINK_RX3_M
AB9	WMSS_RST_N	E1	WLAN_CH1_I_M
AC9	JTAG_PS_HOLD	E2	WLAN_CH1_I_P
AB10	VREG_L14A_1P8	E3	QLINK_RX2_M
AC10	VREG_L14A_1P8	E4	QLINK_RX2_P
AB11	USBC_AUDIO_ORIENT	F1	WLAN_CH1_Q_M
AC11	SMB_STAT	F2	WLAN_CH1_Q_P
AB12	QUP12_UART_TX	F3	QLINK_RX1_P
AC12	WCD_INT2	F4	QLINK_RX1_M
AB13	SBU_SW_OE	G1	WLAN_CH0_Q_M
AC13	QUP12_UART_RX	G2	WLAN_CH0_Q_P
AB14	BT_FM_SB_CLK	G3	QLINK_CLK_M
AC14	BT_FM_SB_DATA	G4	QLINK_CLK_P
AB15	SDM_DMIC_DATA1	H1	DGND
AC15	HAPT_PWM	H2	DGND
AB16	QUP8_SPI_MISO	H3	QLINK_TX1_M
AC16	WCD_RESET_N	H4	QLINK_TX1_P
AB17	QUP8_SPI_CS_N	J1	USB_IN_MID
AC17	QUP8_SPI_MOSI	J2	USB_IN_MID
AB18	WCD_SB_CLK	J3	USB_IN_MID
AC18	QUP8_SPI_CLK	J4	USB_IN_MID
AB19	DGND	K1	USB_OVPIC2_VBUS
AC19	WCD_SB_DATA1	K2	USB_OVPIC2_VBUS
AB20	WCD_SB_DATA0	K3	USB_OVPIC2_VBUS
AC20	LPI_SPI_1_MISO_SNSR	K4	USB_OVPIC2_VBUS
AB21	LPI_SPI_1_CLK_SNSR	L1	STAT_CHG
AC21	LPI_SPI_1_CS1_N_SNSR	L2	DC_SNS
AB22	LPI_SPI_1_CS0_N_SNSR	L3	DGND
AC22	LPI_SPI_1_MOSI_SNSR	L4	DC_EN
AB23	LPI_I2C_1_SDA	M1	DGND
AC23	LPI_I2C_1_SCL	M2	DGND
AB24	MI2S_2_MCLK	M3	VREG_L19A_3P3
AC24	FORCED_USB_BOOT	M4	VREG_L19A_3P3
AB25	LPI_MI2S_2_SCK	N1	WCD_LNBBCLK2
AC25	LPI_MI2S_2_WS	N2	BATT_ID
AB26	LPI_MI2S_2_DATA0	N3	LNBBCLK3
AC26	LPI_MI2S_2_DATA1	N4	VREG_L16A_2P7
AB27	DGND	P1	RF_CLK2
AC27	DGND	P2	RF_PA0_THERM
AB28	MDP_VSYNC_P	P3	SDM_LNBBCLK1_EN
AC28	CAM_FLASH_THERM	P4	RF_PA1_THERM
AB29	VBUS_OVP_INT	R1	VREG_S6A_1P35
AC29	BOOT_CONFIG_3	R2	VREG_S6A_1P35

AB30	SSC_UART_3_RX_OIS_SCL	R3	VREG_L2A_1P0
AC30	SSC_UART_3_TX_OIS_SDA	R4	VREG_L3A_1P0
AB31	LPI_UART_2_RX_SEN_SCL	T1	DGND
AC31	LPI_UART_2_TX_SEN_SDA	T2	CBLPWR_N
AB32	LPI_SPI_2_MOSI	T3	PM_RESIN_N
AC32	LPI_SPI_2_CS_N	T4	VREG_L12A_1P8
AB33	LPI_SPI_2_MISO	U1	USB3_SS_RX0_M
AC33	LPI_SPI_2_CLK	U2	USB3_SS_RX0_P
AB34	DGND	U3	VBATT_CONN_ISNS_P
AC34	LPI_SPI_1_CS2_N_SNSR	U4	VBATT_CONN_ISNS_M
AB35	LPI_UART_1_TX	V1	USB3_SS_TX0_P
AC35	LPI_UART_1_RX	V2	USB3_SS_TX0_M
AB36	DGND	V3	QNOVO_FET_CTL
AC36	WCD_INT1	V4	VCOIN
AB37	HALL_INT_N	W1	USB3_HS_DM
AC37	MAG_INT_N	W2	USB3_HS_DP
AB38	QUP9_I2C_SCL	W3	BUA
AC38	QUP9_I2C_SDA	W4	SLEEP_CLK
AB39	DGND	Y1	USB3_SS_TX1_P
AC39	DGND	Y2	USB3_SS_TX1_M
AB40	DGND	Y3	VREG_S4A_2P04
AC40	FLASH_LED1	Y4	VREG_S4A_2P04
AB41	ACCL_GYRO_DRDY_INT	AA1	USB3_SS_RX1_M
AC41	ACCL_GYRO_EVENT_INT	AA2	USB3_SS_RX1_P
AB42	TS_RESET_N	AA3	VREG_L9A_1P8
AC42	TS_INT_N	AA4	VREG_L7A_1P2
AB43	DGND	AB1	DP_AUX_M
AC43	DGND	AB2	DP_AUX_P
AB44	QUP15_SPI_CS_N	AB3	PHONE_ON_N
AC44	QUP15_SPI_CLK	AB4	DGND
AB45	QUP15_SPI_MOSI	AC1	DGND
AC45	QUP15_SPI_MISO	AC2	DGND
AB46	GPIO_126	AC3	QLINK_ENABLE
AC46	JTAG_SRST_N	AC4	HDMI_5VM_PS
AB47	JTAG_TMS		
AC47	JTAG_TRST_N		
AB48	JTAG_TCK		
AC48	JTAG_TDO		
AB49	JTAG_TDI		
AC49	LCD0_RST_N		
AB50	ALPS_INT_N		
AC50	PRESS_INT		
AB51	DGND		
AC51	PS_INT		
AB52	MIPI_DSI1_L0_M		
AC52	DGND		
AB53	MIPI_DSI1_L0_P		
AC53	DGND		

For additional detailed signal definition of each of the 364-BGA Balls, please refer to the Chapter 11 of the XR1 SOM Datasheet: GPIO Configure Table, Table 11-1, Table 11-2, Table 11-3, and Table 11-4.

6.4 ESD Ratings

The SOM is not designed with ESD protection. It is recommended to take proper precautions in a static free environment when handling the SOM.

7. Test Point For Reserved Pin

Table 7. Test Point

Test Point	Pin Name	Voltage	Type	Function Description
TP1602	LDO_CTRL(PM670)	-	AO	No Connect
TP1802	GPIO_12(PM670)	1.8V	LV	Configurable
TP2458	LPI_GPIO_20(SXR1130)	1.8V	DO	Audio codec PDM synchronization signal Audio reference clock
TP2718	GPIO_02(PM670)	-	LV	Configured as SLEEP_OUT during PON
TP2815	NA_N(PM670)	-	AI	PM670A/PM670L die temperature input
TP2816	KPD_PWR_N(PM670)	-	DI	Keypad power-on button
TP2817	FAULT_N(SXR1130)	-	DI, DO	PMIC fault signal (bidirectional) that initiates shutdown or S3 reset to all PMICs.

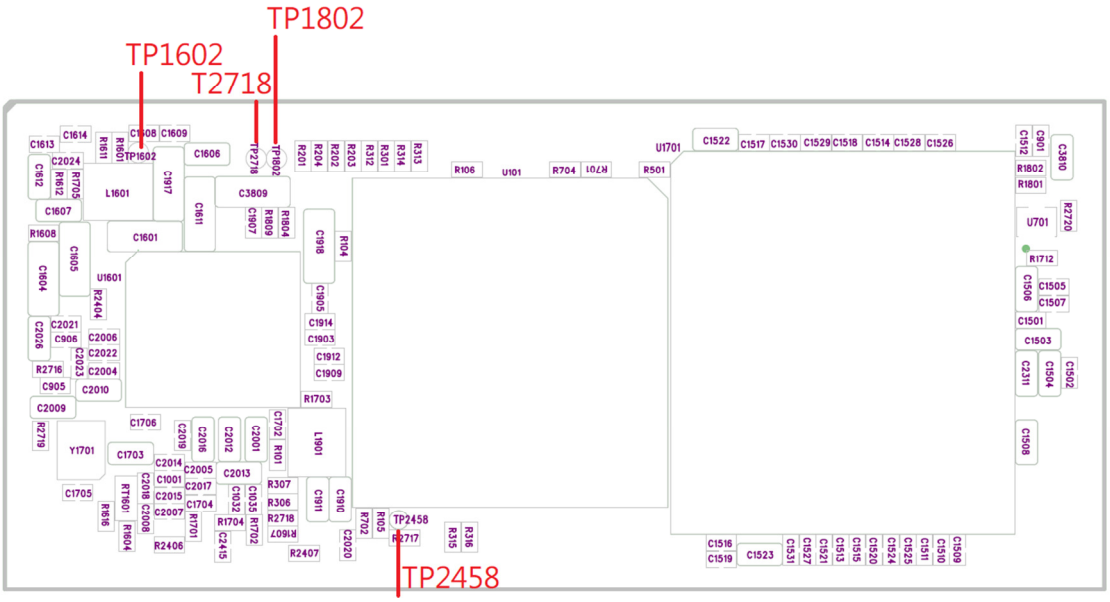

Figure 7-1. TOP Side Test Point

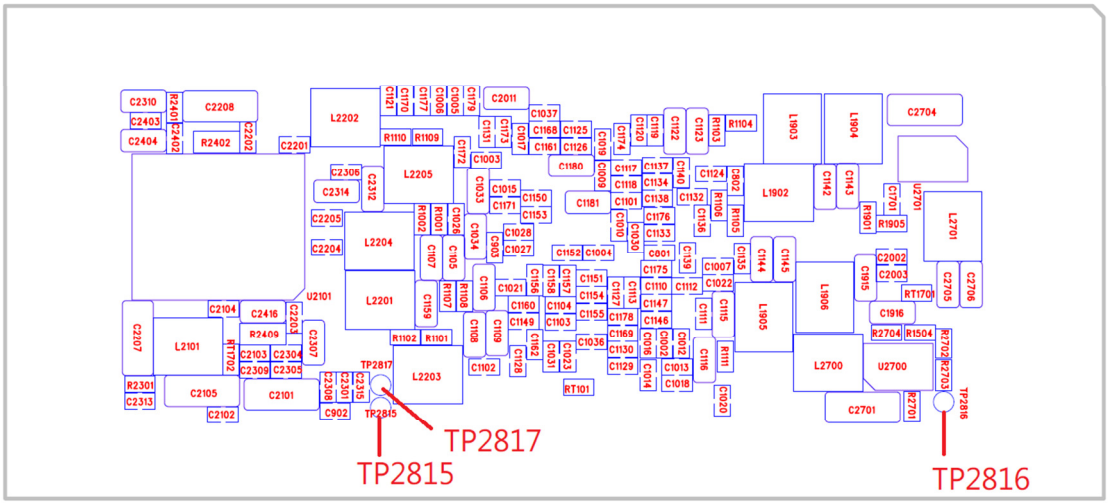

Figure 7-2. Bottom Side Test Point

8 Mechanical Outline Drawing

8.1 The SOM Outline Dimension

Outline dimension is 38mm(L)x17mm(W)x4.03mm(H) with metal shielding case, 3D components on PCBA.

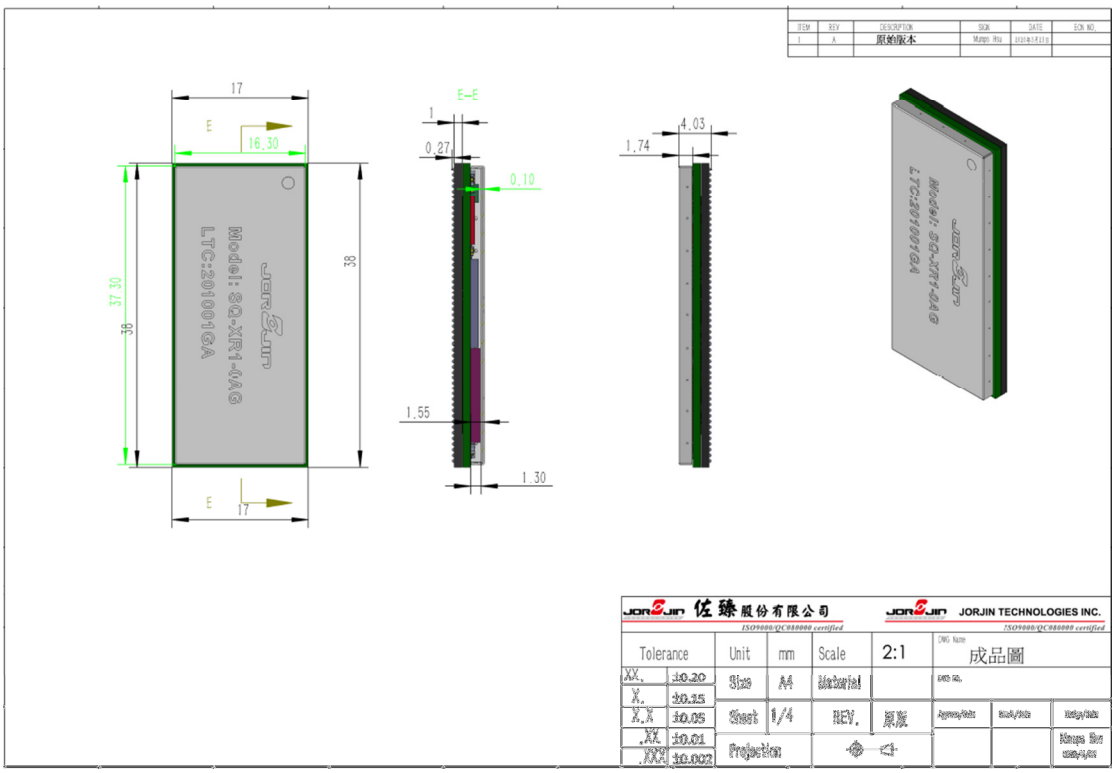

Figure 8.1 SOM Outline Dimension 38mmx17mm(+/-0.15mm)

8.2 Placement Drawing

SOM module main component placement.

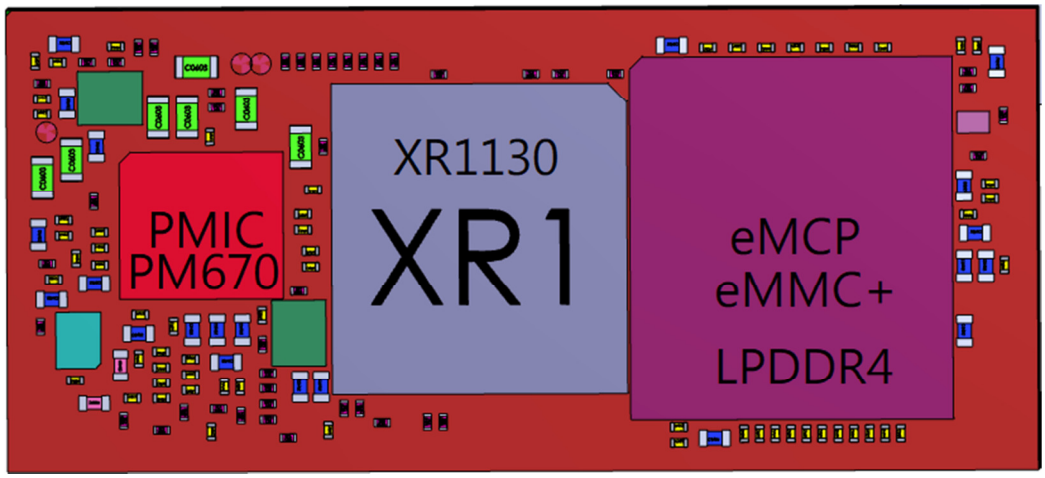

Figure 8.2-1. XR1 SOM main component (Top view)

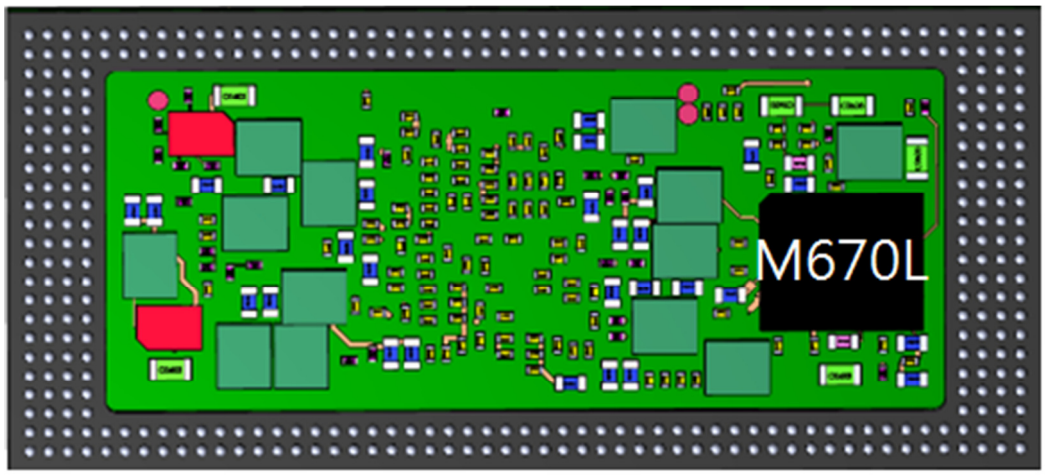

Figure 8.2-2. XR1 SOM main component (Bottom view)

9 BGA Pad Recommendations for Carrier Board Design

The footprint information in this section is taken from JorJin SOM carrier ("XR1 HDK") and can be a guide when designing pad for the SOM. The dimensions show the relative position of each Solder pad on customer carrier board (Figure 9).

＊All units in millimeters(+/-0.05mm)

Table 9. BGA pad for Carrier Board Design Suggestion

Pad Type	Package Type	BGA
	Pitch	0.4
SMD	Pad Diameter	0.4
	Solder Mask Diameter (Nominal)	0.35
	Surface Trace Width(max)	No restriction

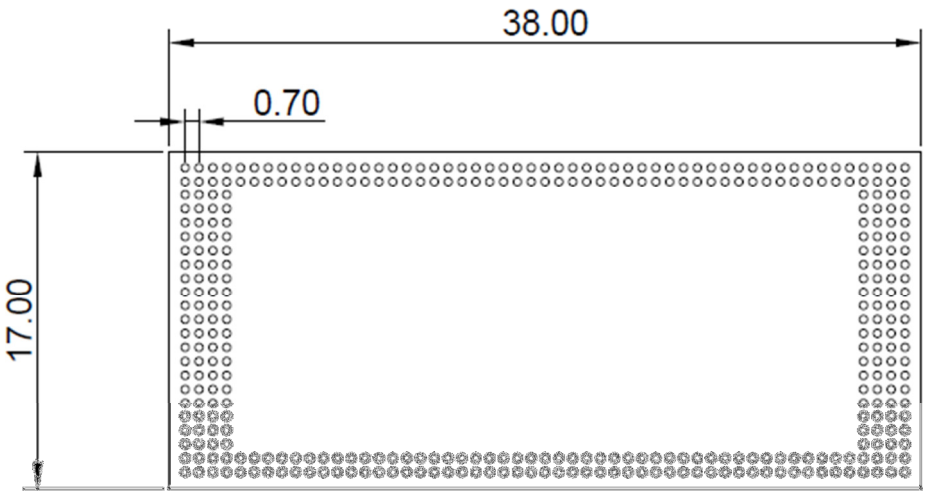

Pitch = 0.7 mm
Ball count = 364 e.a.
Pad size : 0.4 mm
S/M open : 0.35 mm

Figure 9. Suggestion of Carrier Pad-Pattern Dimensions

10 SOM/Carrier Board Soldering

The XR1 SOM will be mounted on customer's carrier board through SMT. Customers designing their own carrier board must comply with the rules defined in the XR1 SOM package specification to achieve the expected reliability.

Table 10. SOM package

Category	Definition
Module name	SXR1 SOM
Package type	364 BGA Ball
Package body size	17x38x3.04mm
Ball count	364
Ball composition	SAC305
Solder ball pitch	0.4mm

11 Revision History

Document ID	Release date	Modified Notice	Author
SQ-XR10AG-01-HDS-D01	2020/05/15	First Draft	Sunny Shen